5TH GENERATION END-TO-END NETWORK, EXPERIMENTATION, SYSTEM INTEGRATION, AND SHOWCASING

[H2020 - Grant Agreement No. 815178]

Deliverable D3.11

5G Access Components and User Equipment (Release A)

Editor I. Koffman (REL)

Contributors REL(RunEL NGMT Ltd.), ECM (Eurecom), UMA (Universidad de Málaga), IHP (IHP GMBH – Innovations for high performance microelectronics/Leibniz-Institut fuer Innovative Mikroelektronik)

Version 1.0

Date October 15th, 2019

Distribution PUBLIC (PU)

List of Authors

REL	RunEL NGMT Ltd.
Israel Koffman, Baruch Globen	
ECM	Eurecom
Florian Kaltenberger	
UMA	UNIVERSIDAD DE MALAGA
Iván González	
IHP	IHP GMBH - INNOVATIONS FOR HIGH PERFORMANCE MICROELECTRONICS/LEIBNIZ-INSTITUT FUER INNOVATIVE MIKROELEKTRONIK
Jesús Gutiérrez, Nebojsa Maletic, Marcus Ehrig	

Disclaimer

Copyright

The 5GENESIS Consortium consists of:

NATIONAL CENTER FOR SCIENTIFIC RESEARCH "DEMOKRITOS"	Greece
AIRBUS DS SLC	France
ATHONET SRL	Italy
ATOS SPAIN SA	Spain
AVANTI HYLAS 2 CYPRUS LIMITED	Cyprus
AYUNTAMIENTO DE MALAGA	Spain
COSMOTE KINITES TILEPIKOINONIES AE	Greece
EURECOM	France
FOGUS INNOVATIONS & SERVICES P.C.	Greece
FON TECHNOLOGY SL	Spain
FRAUNHOFER GESELLSCHAFT ZUR FOERDERUNG DER ANGEWANDTEN FORSCHUNG E.V.	Germany
IHP GMBH – INNOVATIONS FOR HIGH PERFORMANCE MICROELECTRONICS/LEIBNIZ-INSTITUT FUER INNOVATIVE MIKROELEKTRONIK	Germany
INFOLYSIS P.C.	Greece
INSTITUTO DE TELECOMUNICACOES	Portugal
INTEL DEUTSCHLAND GMBH	Germany
KARLSTADS UNIVERSITET	Sweden
L.M. ERICSSON LIMITED	Ireland
MARAN (UK) LIMITED	UK
MUNICIPALITY OF EGALEO	Greece
NEMERGENT SOLUTIONS S.L.	Spain
ONEACCESS	France
PRIMETEL PLC	Cyprus
RUNEL NGMT LTD	Israel
SIMULA RESEARCH LABORATORY AS	Norway
SPACE HELLAS (CYPRUS) LTD	Cyprus
TELEFONICA INVESTIGACION Y DESARROLLO SA	Spain
UNIVERSIDAD DE MALAGA	Spain
UNIVERSITAT POLITECNICA DE VALENCIA	Spain
UNIVERSITY OF SURREY	UK

Version History

Rev. N	Description	Author	Date
1.0	Release of D3.11	Israel Koffman, Jesús Gutiérrez, Almudena Díaz Zayas	15.10.2019

LIST OF ACRONYMS

Acronym	Meaning
3GPP	3rd Generation Partnership Project
5G-PPP	5G Infrastructure Public Private Partnership
5G-IA	The 5G Infrastructure Public Private Partnership
ADC	Analogic-Digital Converter
AFE	Analog Front-End
ASIC	Application Specific Integrated Circuit
BBU	Base Band Unit
BCH	Broadcast Channel
CA	Carrier Aggregation
CBR	Constant Bit Rate
CORESET	Control Resource Set
CPRI	Common Public Radio Interface
CRC	Cyclic Redundancy Check
CSI	Channel Status Information
CU	Central Unit
DAC	Digital-Analogic Converter
DCI	Downlink Control Indicator
DRAN	Distributed Radio Access Unit
DRB	Data Radio Bearer
DU	Distributed Unit
ELCM	Experiment Life Cycle Manager
eMBB	Enhanced Mobile Broadband-5G Generic Service
EN-DC	EUTRA-NR Dual Connectivity
eNB	eNodeB, evolved NodeB, LTE eq. of base station
EU	European Union
EPC	Evolved Packet Core
FDD	Frequency Division Duplexing
FEC	Forward Error Correction
gNB	gNodeB, 5G NR, next generation NR eq. of base station
GPIO	General Purpose Input Output
GTP	GPRS Tunneling Protocol
KPI	Key Performance Indicator

LDPC	Low Density Parity Check
LTE	Long-Term Evolution
LTE-A	Long-Term Evolution - Advanced
LWIP	LTE WLAN integration with IPsec tunnel
MAC	Medium Access Control
MIB	Master Information Block
MIMO	Multiple Input Multiple Output
mMTC	Massive Machine Type Communications-5G Generic Service
MOCN	Multiple Operator Radio Access
NR	New Radio
NSA	Non-Stand-Alone
OAI	OpenAirInterface
OSA	OpenAirInterface Software Alliance
PBCH	Physical Broadcast Channel
PCB	Printer Circuit Board
PDCCH	Physical Downlink Control Channel
PDCP	Packet Data Convergence Protocol (PDCP)
PDSCH	Physical Downlink Shared Channel
PRACH	Physical Random Access Channel
PSS	Primary Synchronization Signal
PUCCH	Physical Uplink Control Channel
PUSCH	Physical Uplink Shared Channel
QFI	QoS Flow ID
RAN	Radio Access Network
RAT	Radio Access Technology
RE	Resource Element
RLC	Radio Link Control
RM	Rate Matching
RNTI	Radio Network Temporary Identifier
RRC	Radio Resource Control
RRH	Remote Radio Head
SA	StandAlone
SDAP	Service Data Adaptation Protocol
SDR	Software Defined Radio
SDU	Service Data Unit
SoC	System on Chip

SSB	Synchonization Signal Block
SSS	Secondary Sinchronization Signal
TDD	Time Division Duplex
UDP	User datagram Protocol
UE	User Equipment
uRLLC	Ultra-Reliable, Low-Latency Communications
WLAN	Wireless Local Area Network

Executive Summary

This document is a midterm report on the 5G access components and user equipment that are being developed and deployed in the different 5GENESIS Platforms. The document emphasizes on the New Radio (NR) and the wireless access links of the facility. It includes also the 5G end devices, and the non-3GPP access technologies integrated in the 5GENESIS facility. Moreover, it provides an insight on the solution and components part of terrestrial backhaul system to be deployed in the Berlin Platform.

The portion of the 5GENESIS Infrastructure described in this document is that inside the red line depicted in Figure 1.

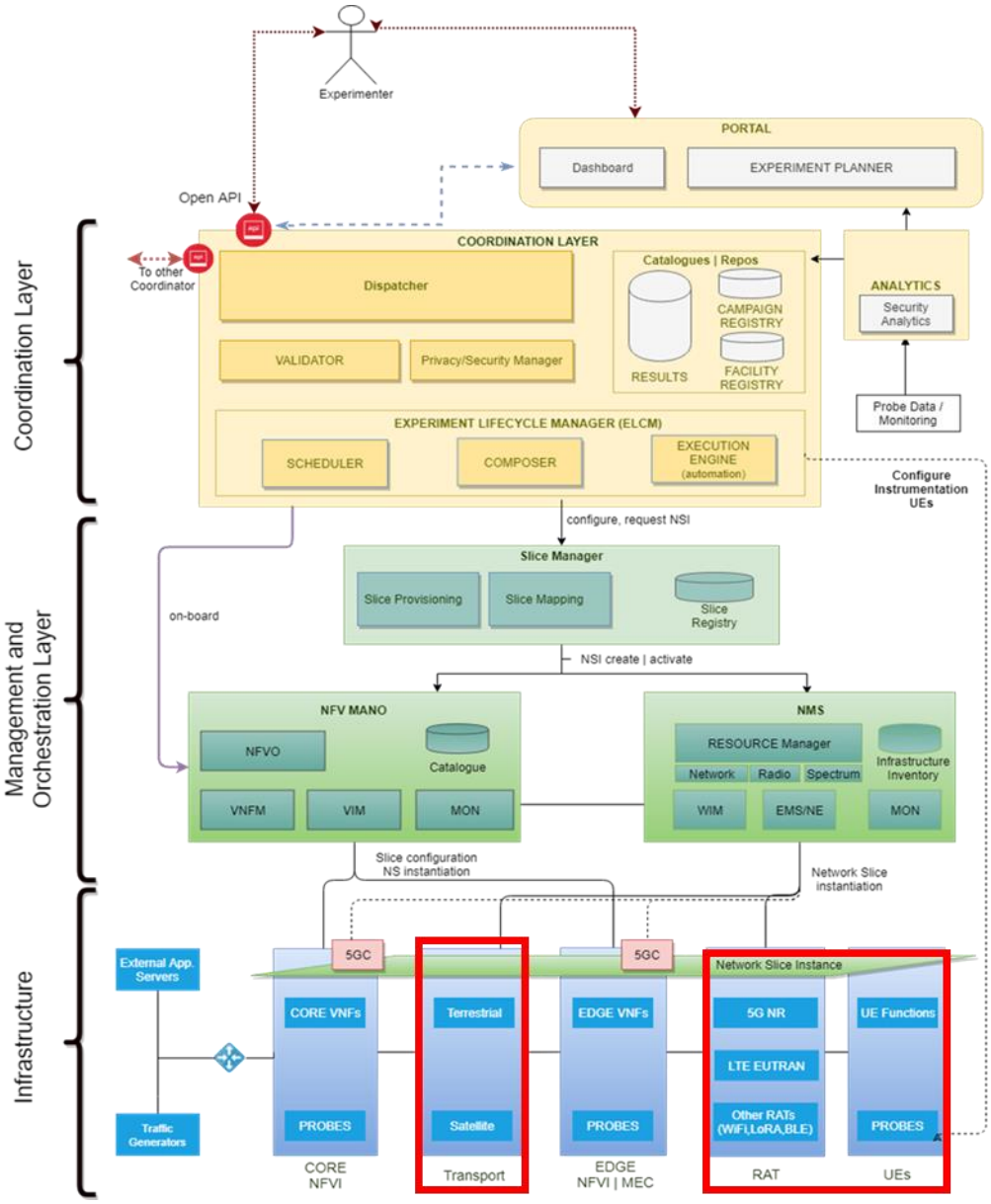

Figure 1: Access and User Equipment Network in the 5GENESIS overall System Architecture

This document describes the midterm work performed by 5GENESIS members on the design and development of the 5G gNB (5G Base Stations) for the needs of 5GENESIS platforms, including the Physical and MAC (Layer-1 and Layer 2) layers, as well as its interfaces, structure and processing. The purpose of the gNB is to enable the wireless communication with 5G UEs in different demonstration scenarios. The gNB will be connected northbound to EPC and/or NgCore Networks, operating at 3.5 GHz, and will be able to support different scenarios in URLLC, eMBB and mMTC applications. The implemented 5G air interface is presented, including its compliance to the applicable standards.

Table of Contents

1. INTRODUCTION

1.1. Purpose of the Document

One of the key features of the 5GENESIS Platforms is that they will feature 5G Access Components and User Equipment, and they will be able to serve as experimentation platforms for assessing 5G KPIs end-to-end (E2E). Of course, increased data rates have to be supported in the access part of the network, leading to stringent requirements in the transport of the data towards the core. Novel terrestrial backhaul technologies are asked to satisfy these requirements, and they leverage high frequencies, where increased bandwidth is available, to cater the ever increasing demand of data rate at the users' side.

The main target of this deliverable is to summarise the 5GENESIS mid-term activity in the area of 5G Access Components (5G Base Stations) and User Equipment, This area is defined in the proposal as Task T3.6. "5G Radio Components/5G Air Interface/UE", targeting the 5G access layers. Additionally, it describes the mid-term activity in the field of wireless terrestrial backhaul, with the focus on the development of millimeter wave (mmWave) small cells.

The activity under T3.6 includes the design and development the 5G gNB (5G Base Stations) for the needs of 5GENESIS platforms, including the Physical and MAC (Layer-1 and Layer 2) layers, as well as its interfaces, structure and processing. The gNB will be able to communicate with 5G UTs in different demonstration scenarios and will be connected northbound to NgCore Networks, operating at 3.5GHz and being able to support different slices and numerologies.

1.1.1. Document Dependencies

The document at hand has been produced in accordance to the specifications, requirements and assumptions discussed in the 5GENESIS deliverables related to both the requirements of the facility and the architecture.

The infrastructure elements here described belong to the 5GENESIS Infrastructure Layer and belong to the radio part of the infrastructure, whether it is the Radio Access Network (RAN) or the Terrestrial Backhaul. These elements will be part of several platforms, as indicated in the deliverables of WP4. Table 1 summarizes the relevance towards the deliverables produced by WP2.

Table 1 Document dependencies

id	Document title	Relevance
D2.1 [1]	Requirements of the Facility	The document sets the ground for the first set of requirements related to supported features at the testbed for the facilitation of the Use Cases.
D2.2 [2]	5GENESIS Overall Facility Design and Specifications	The 5GENESIS facility architecture is defined in this document. The list of functional

		components to be deployed in each testbed is defined.
D2.3 [3]	Initial planning of tests and experimentation	Testing and experimentation specifications that influence the testbed definition, operation and maintenance are defined.

1.2. Structure of the Document

The implemented 5G air interface is presented in the following chapters of this deliverable as follows:

- Section 2 offers a description of 5G Radio Access Network Architecture.
- Section 3 describes the implementation of the 5G gNodeB (Base Station) PHY layers.
- Section 4 is focused on the implementation of the 5G UE (User Terminal).
- Section 5 describes other types of Access components used in the 5GENESIS project such as LTE emulators.
- Section 6 offers a description of the wireless terrestrial backhaul components that connect the RAN infrastructure with the Core Network.

1.3. Target Audience

This deliverable is mainly addressed to:

- The Project Consortium to validate that all objectives and proposed technological advancements have been analysed and to ensure that, through the identified requirements, the next actions can be concretely derived. Furthermore, the deliverable sets to establish a common understanding among the Consortium with regards to: i) the Facility blueprint architecture to be set for reference, ii) the technologies to be utilised, extended and demonstrated per platform, and iii) the 5GENESIS targeted use cases;
- The Research Community and funding EC Organisation to: i) summarise the 5GENESIS scope, objectives and intended project innovations, ii) detail the 5GENESIS Facility testbeds and target use cases that shall be demonstrated and measure provided technological advancements and iii) present the related requirements and associated KPIs that must be tackled to achieve the expected results;
- The general public for obtaining a better understanding of the framework and scope of the 5GENESIS project.

Last but not least, the content of this deliverable is in-line with the guidelines of Deliverable 1.2 “Legal aspects and data management (Release A)”.

2. 5G Radio Access Network Architecture

Several architecture options for 5G deployments have been described by 3GPP [1], but in the beginning, only two will be implemented: non-standalone (NSA) and standalone (SA).

The architecture of NSA and SA are depicted in Figure 2. In the NSA operation, also called EUTRA-NR dual connectivity (EN-DC), the 5G gNB is operating under the control of a 4G eNB, which serves as a gateway to the Evolved Packet Core (EPC) and carries all control plane traffic to the UEs. UEs first need to connect to the 4G network and will receive all necessary configuration to connect to a 5G cell through radio resource control (RRC) signaling on the 4G link. This setup will allow a smooth migration from 4G to 5G. In the SA version, the gNB directly connects to the 5G core and also handles all the control plane traffic.

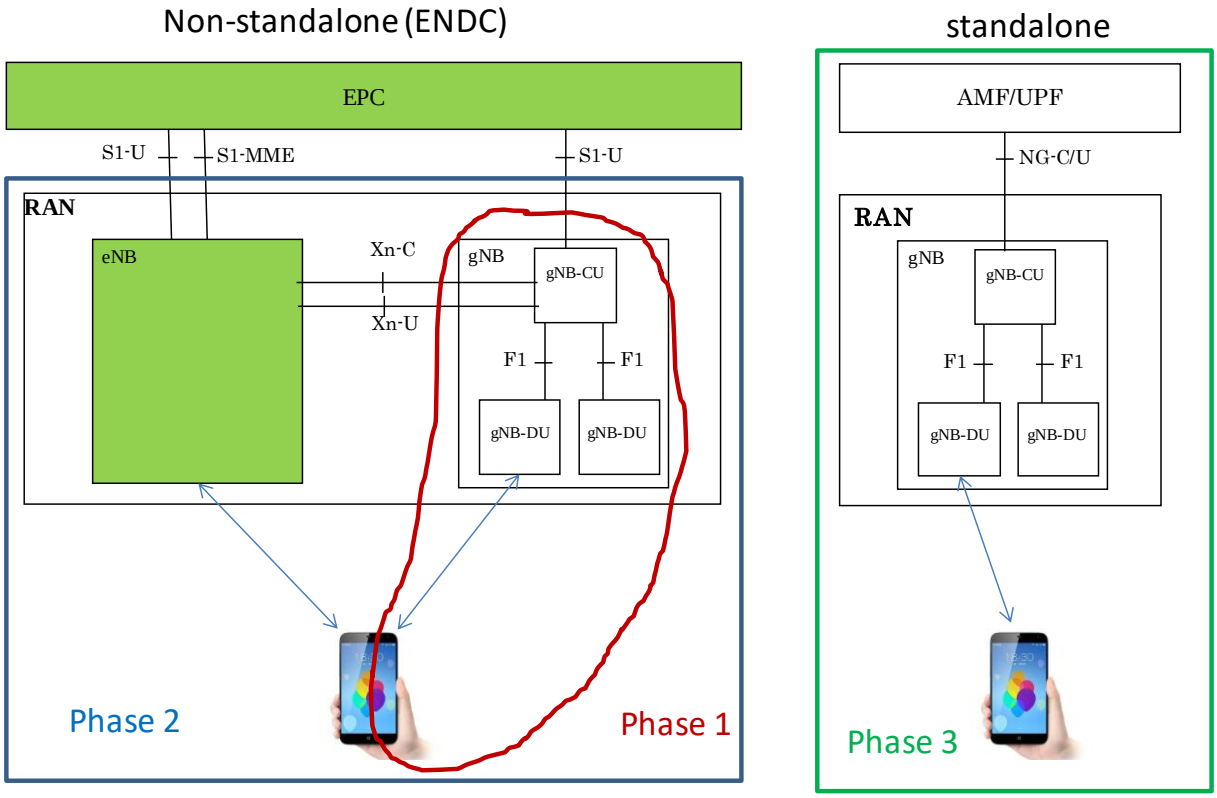

Figure 2: 3GPP network architecture options and 5GENESIS development phases

5GENESIS will initially target NSA EN-DC mode in integration cycle 2 and SA mode in integration cycle 3. In integration cycle 1, an intermediary mode (called “noS1” mode) where gNB and UE can be used without an eNB and without a core network, by pre-configuring both gNB and UE with all the parameters that would otherwise be signaled.

The Radio Access Network (RAN) architecture is following then3GPP 5G architecture, with a central node accommodating the Central Unit (CU). This unit, on its northbound end, connects with the core network; and, on its southbound end, it connects with Distributed Units (DUs) using 3GPP F1 (TS 38.470) interface. The CU and DU related protocols are depicted in Figure 3.

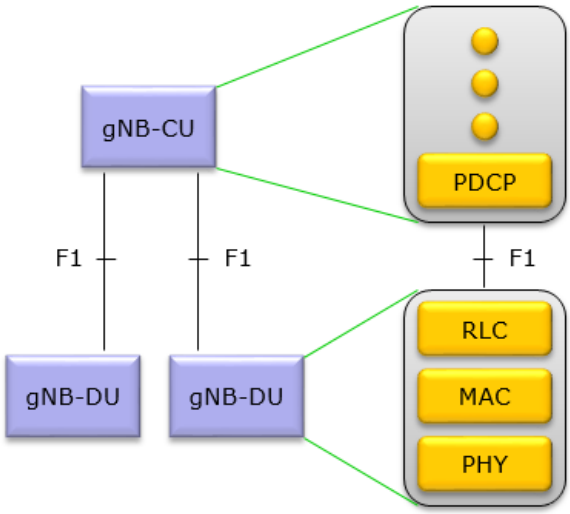

Figure 3: CU and DU protocols Stack

The DU can be further distributed by splitting the PHY layer into a high PHY layer unit and low PHY layer units. The high PHY unit is called Distributed Radio Access Unit (DRAN) and the low PHY units the Remote Radio Heads (RRH).

The architecture of the overall RAN system [1] is depicted in Figure 4.

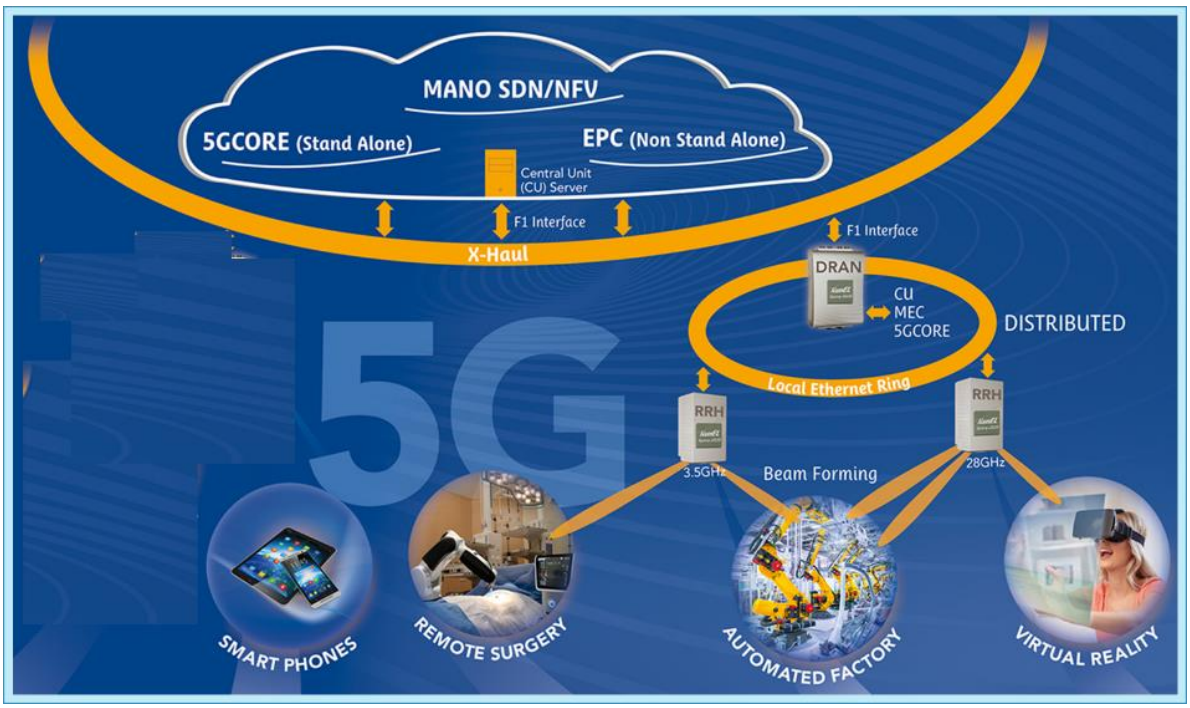

Figure 4: The RAN Architecture

Figure 4 also shows the RAN layout flexibility including two X-haul layers. At the top of the RAN, a backhaul connects the CU with the DRAN units. At the lower part of the RAN, the fronthaul connects the DRAN with the RRH units. This fronthaul can be accomplished using LAN or radio technologies. In the above drawing a Gigabit Ethernet ring is used to carry out the interconnection.

3. 5G gNB (Base Station) Description

3.1. Background

The initial plan for the gNB solution is based on an NSA 3A configuration (LTE assisted, and EPC connected). The gNB includes two main parts, the Physical layer part and the Protocol stack part.

The Physical layer part comprises two elements:

- The Distributed RAN (DRAN).
- Many Remote Radio Heads (RRHs).

The Protocol stack part supports the MAC, RLC, PDCP, SDAP and RRC layers [1]. All these layers will share the same platform. A possible split of this platform is considered using the F1 interface [1].

Two main interfaces are provided at the gNB ends. On its front-end part, the 3GPP Rel.15 3.5 GHz TDD Air-Interface is supported. On its back-end, the SDAP layer supports a S1-U interface.

3.2. Architecture, Implementation, Integration and Testing

The hardware based Physical Layer of the 5G gNodeB

The Physical layer part is implemented using two units' types: these are the RRH unit and the DRAN unit. Both platforms are FPGA based that gives flexibility for changes and adaptations

The DRAN is the PHY layer central unit which can support up to 64 RRH units with one beam each or 16 RRH units with 4 beams each .

In 5GENESIS project, the DRAN connects with 2 RRH units. The connection is accomplished via a 10Gbit/s F/O ring.

Figure 5 depicts the PHY layer architecture.

Figure 5: PHY layer with DRAN and RRH units

The **DRAN** implements the upper functionalities of the PHY layer. These include the FEC process, LDPC for the User Plane (UP) data and Polar for the Control Plane (CP) information. Figure 6 presents the PHY layer (PDSCH and PUSCH) processing chain. The left part is the DL and the right is the UL.

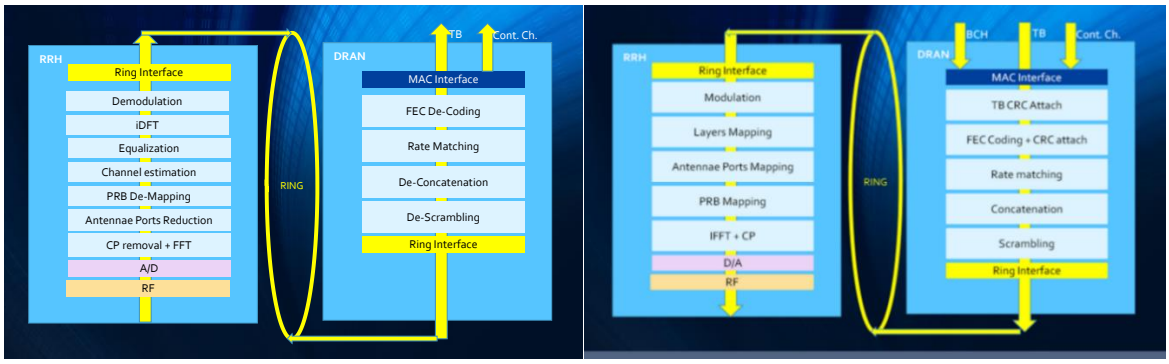

Figure 6: PHY layer (PDSCH and PUSCH) Processing Chain

The figure includes the DRAN (at the left) and the RRH units (at the right).

The DRAN processing includes the CRC and code word generation, the FEC Coding, the Rate Matching (RM) and scrambling (using the RNTI).

The RRH Units bear the lower PHY processes. The RRH includes A/D and D/A converters to convert the digital signals in the Base-band board to the analogue 3.5 GHz RF signals. To accelerate the response time and to meet the high rate of data handling, this part is implemented by an advanced SoC which includes an FPGA. The RRH also carries out digital beam shaping, being each RRH able to support 4 beams.

The Protocol Stack Unit implements the 5G RAN protocol stack. The unit includes limited capability MAC, RLC, PDCP and SDAP layers. The RRC is facilitated using static preconfigured sessions. These layers will run on a high capacity processing server and are planned to be implemented in Phase-3 of the 5GENISES project.

For integration tests in Phase-1, the sessions are accomplished by statically presetting the test parameters such as coding scheme, the modulation scheme, antennae mapping, etc.

Data Transport Blocks transfer is handled over the MAC-PHY interface. This interface is proprietary as set by RunEL.

The general architecture of the RAN is presented in Figure 7.

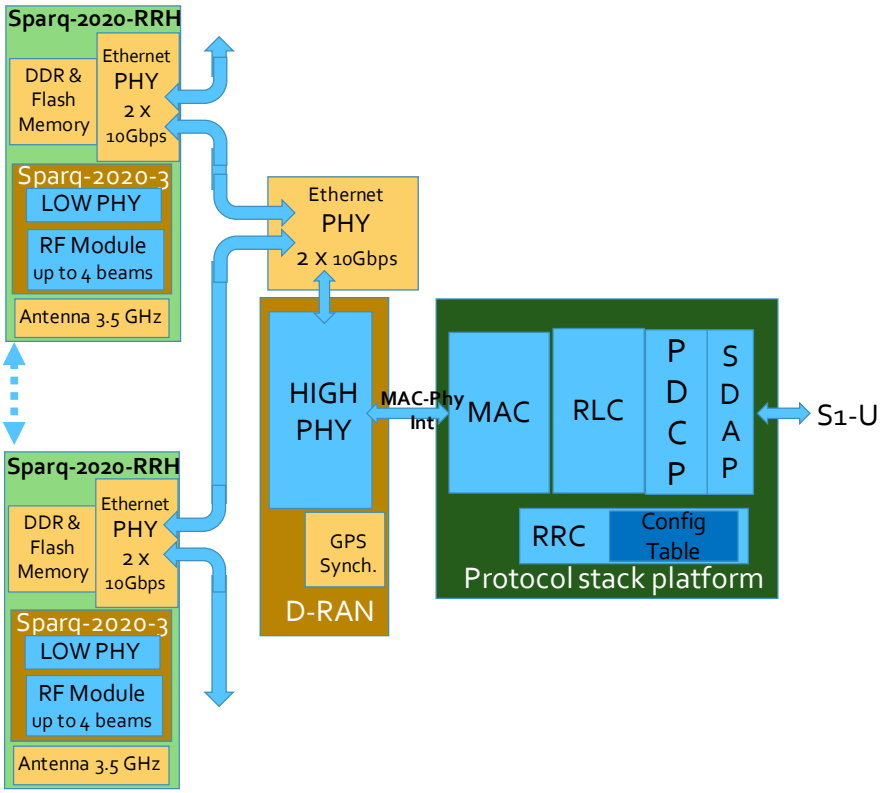

Figure 7: 5GENESIS NR General Block Diagram

S1-U interface – On RAN side the interface is via the SDAP layer, which maps QoS flows to Data radio Bearers (DRBs). GTP User flows will interface via IP/UDP interface with the SDAP protocol entities. Mapping will be predefined. Tunnel's QFI will match the DRB priority. For each configured session the SDAP layer will have a pre-configured port (with related QoS flow). For UL, if required, reflective QFI will be used.

SDU packets data field will have a preconfigured length. Encryption is not supported by the RAN stack.

Radio Interface – the radio uses the 3.5 GHz band, and the supported bandwidth is 100 MHz. The sub-carrier spacing used is 30 kHz and Duplex method is TDD.

Broadcast Channel (BCH) – uses beam sweeping, enabling the UE to find its preferred beam.

Sessions Management – Sessions are statically preconfigured with preset parameters. Up to 16 sessions can be supported. The RAN is able handling up to 16 UE devices.

Each session parameters are preset by using a special configuration setup table that handles sessions' parameters, including RNTI, BWP (Band Width Part set to use the whole band), rate, priority, CSI, resources assignment (using CBR), coding scheme, antennae mapping, modulation scheme, precoder setup and more.

The PRB resources are statically pre-assigned for each session in the downlink and uplink.

To facilitate mobility between the different RRH beams coverage area, the sessions Down Link data will be transmitted by all beams over the same resource elements. This introduces a cell less coverage supporting mobility with no need for hand over.

Video Transport Example - A video server runs 4 VLC applications that deliver video through UDP/IP packets to "mobile UE" units.

UDP Allocated ports: up to 4 ports (e.g. 2235, 2236, 2237, 2238) are configured, each per an end-user.

UDP video packets payload: 752 bytes per packet.

The IP addresses for the video server, the RAN IP port and the UE are pre-configured and set at the test plan in line with the test bed IP subnet.

The DL video stream payload is transported by the RAN to the respective 5G UE's.

A basic configuration of such video services test is depicted in Figure 8.

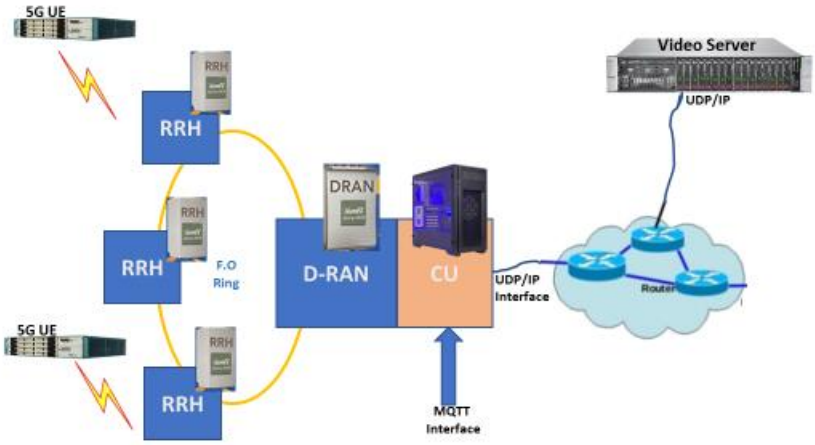

Figure 8: Video Transport configuration

For simplicity, the IP network is bypassed making a direct bridged connection between the video server and the DRAN-CU unit. The latter has a configuration interface to enable setting the RAN parameters in accordance with the tested slice.

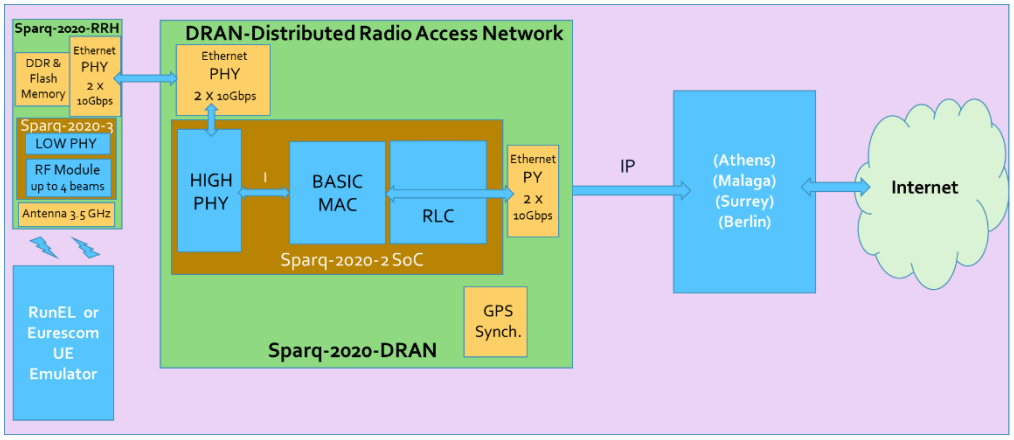

Figure 9: Video Transport tested layout

Figure 9 presents the test-bed scenario tested layout. For the tested scenario we used a UE which was built using RRH modified modules with added logic to enable its operation as a UE as depicted in Figure 10 below.

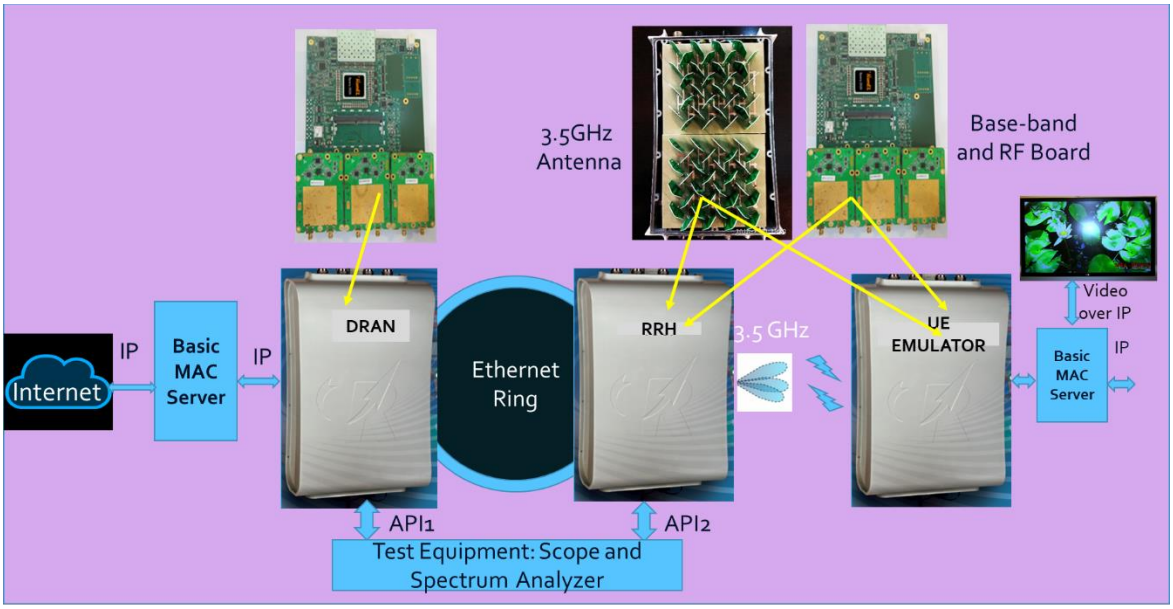

Figure 10: Phase-1 5G link with DRAN ,RRH and UE Emulator

Resources Allocation – The air-interface slot RE allocation map is depicted in the right side of Figure 11 below. The slot allocation for only one UE (UE1) is activated is depicted at the central part of Figure 11, the Broadcast Channel (BCH) Resource Elements (RE) slot allocation is described at the right side of the Figure.

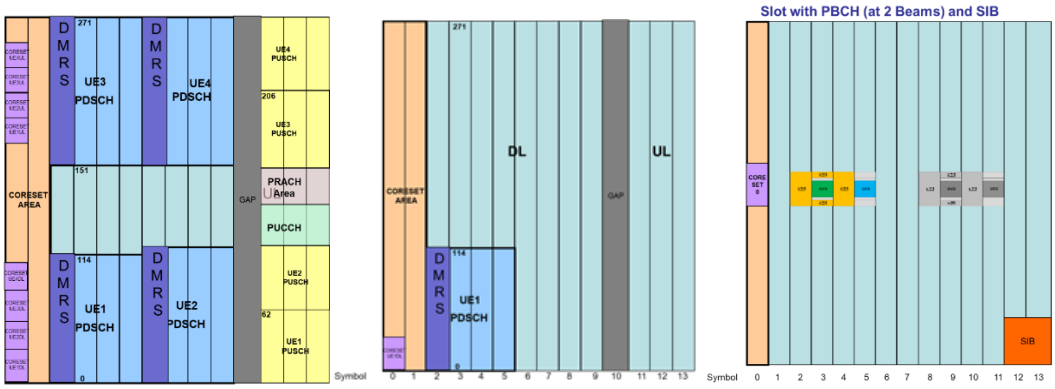

Figure 11: RE Allocations Maps

The modulation and coding MCS scheme used is index 5 (QPSK) of 3GPP 38.214 std. Table 5.1.3.1-1 (MCS index table 1 for PDSCH) [1].

The User Terminal (UE1) main parameters are defined in the following table:

	UE1	UE2	UE3	UE4
BWP(MHz)	100	100	100	100
$N_{RB}^{DL,BWP}$	272	272	272	272
UE_1 L_{RB}	115	120	120	120
$UE_{1\ RB\ start}$	0	0	152	152
C-RNTI	1000	1001	1002	1003
MCS index	5	23	23	23
CORESET (Sym1,PRB)	0-23	24-47	48-71	72-95
Packet payload size	376	564	564	564
VLC Packets /TB	1	3	3	3
QAM	2	6	6	6
Zero Padding Bytes	105	550	550	550
Allocated Symbols	4	4	4	4
n_{prb}	115	120	120	120
Code Rate	0.370117	0.702148438	0.702148	0.70214844

The downlink control information , the DCI, is detailed in the following table:

UE_1	1	0111100100100000	0110	0	00101	1	00	0000	00	00	000	000	1011110010100000011000010110000000000000000	BC9030B0000
UE_2	1	0111111001110000	1010	0	10111	1	00	0000	00	00	000	000	1011111100111000010100101111000000000000000	BF3852F0000
UE_3	1	0111111100001000	1000	0	10111	1	00	0000	00	00	000	000	1011111110000100010000101111000000000000000	BF8442F0000
UE_4	1	0111111100001000	0011	0	10111	1	00	0000	00	00	000	000	1011111110000100000110101111000000000000000	BF841AF0000
	MSB DL	RIV	SLIV Index	VRB-PRB map	MCS	New data	Red. Ver.	HARQ process	DL assign Index	UL TPC	PUCCH Res. Indicator	HARQ Feedback Indicator		

The Control Resource Set (CORESET) “0” – common CORESET is detailed in the following table.

Common CORESET DCI (CORESET 0)			
1001100011111000010110101110000000000000000			
9C7C2D70000			

The Layer-2 (L2-MAC) to Layer-1 (L1-PHY) Transport Block size is shown in the following table.

TBS Calculation 38.214 - 5.1.3.2				
	UE1 TBS	UE2 TBS	UE3 TBS	UE4 TBS
N'_{RE}	36	36	36	36
N_{RE}	4140	4320	4320	4320
N_{info}	3064.57	18199.6875	18199.7	18199.7
N'_{info}	3840	17920	17920	17920
n	6	9	9	9
C	2	5	5	5
TBS	3848	17936	17936	17936
1/3-TBSbytes	160.3333	747.333333	747.333	747.333

3.3. Innovation

The main innovation in the 5GENESIS Distributed Access solution described in the previous paragraphs is coming from the new PHY layer split approach adopted by the project that provides unique advantages such as very fast handovers between RRHs that contributes to the low latency requirements of URLLC applications and relatively relaxed throughput demand from the Front-haul link that contributes to reduce the CAPEX of the testbeds. This approach has recently been addressed also by leading international industry associations such as O-RAN (https://www.o-ran.org/)

The flexible RAN 5G solution composed of units meeting 3GPP URLLC and eMBB requirements is included in this gNB solution.

To meet these demanding requirements, the PHY units are implemented using a FPGA SoC.

The following drawing presents the prototypes of the DRAN (right) and the RRH (left).

The RRH has two main modules. The low PHY with ring interface module and the active antenna module.

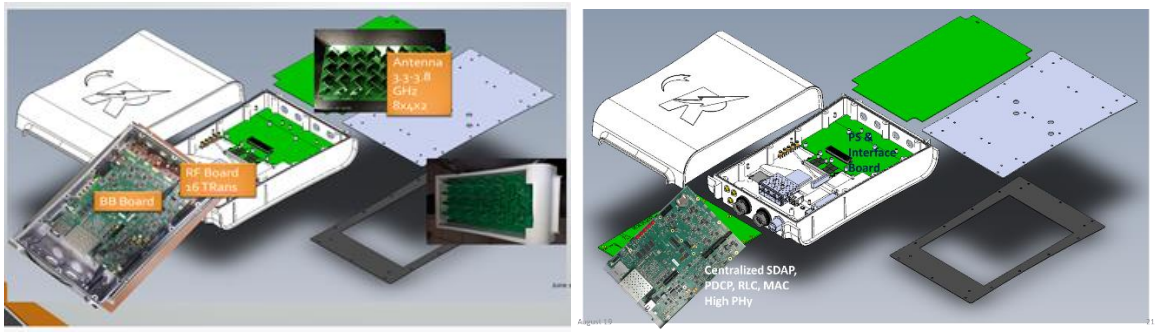

Figure 12: RRH and DRAN units

4. 5G UE (User Terminal) Description

4.1. Background

The few 5G UEs that can already be found on the market are very early models that, typically, contain a firmware specifically designed to work in an operator's network, and are thus not necessary 100% standard compliant yet. Moreover, these UEs do not allow any modifications or even access to debug or measurement reports, making them very unusable for early experimentation.

Until more mature commercial 5G UEs become available, 5GENESIS will engage a software-driven solution based on OpenAirInterface software and off-the-shelf software-defined radio (SDR) platforms. In this section we will describe the hardware components used, the current state of the software and the interoperability with the gNB from the previous section, as well as the future plans in the 5GENESIS project.

4.1.1. OpenAirInterface

OpenAirInterface is an open source initiative that today provides a 3GPP compliant reference implementation of an eNodeB (eNB), User Equipment (UE), and EPC that runs on general purpose computing platforms (x86) together with off-the-shelf SDR cards like the ETTUS USRP, Lime SDR, and ExpressMIMO2. It allows users to set up a compliant 4G LTE network and interoperate with commercial equipment.

A first versions with limited functionally of a 5G New Radio (NR) gNB and UE are also available and will be described in more detail in the next sections.

4.2. Architecture, Implementation, Integration and Testing

4.2.1. Functional Architecture

OpenAirInterface will initially (Phase-1) support NSA mode with an intermediary mode ("noS1" mode) where gNB and UE can be used without an eNB and without a core network, by pre-configuring both gNB and UE with all the parameters that would otherwise be signaled over by the LTE link. In this mode, which is also called the "noS1 mode", traffic can be injected/extracted directly at the level of the PDCP using a virtual TUN interface. However, this should not be confused with the standalone operation, which requires new interfaces to the 5G core as well as more sophisticated procedures for the initial access. OpenAirInterface plans to support standalone mode in integration Phase-3 of the 5GENESIS project, while non-standalone mode will be supported in integration Phase-2.

The protocol stack of the UE is depicted in Figure 13. To interface the PHY with the MAC, an interface similar to the 5G FAPI specified by the small cell forum [6] has been specified in [5]. It consists of a P7 interface for configuration and P5 for data.

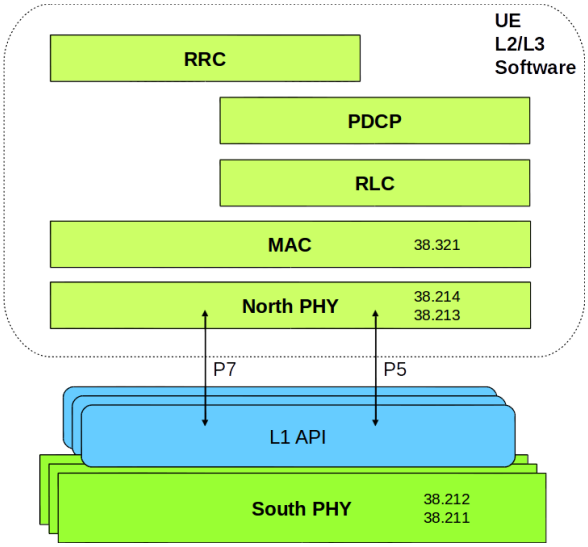

Figure 13: UE protocol stack with PHY/MAC interface

4.2.2. Hardware Architecture

The hardware platform, provided by EURECOM, is going to use the ETTUS N300 boards together with a powerful Laptop with a Core i7-7900 8 core processor. We will use a special adaptor to enable connecting the Thunderbolt 3 interface of the laptop with the 2x10Gbit Ethernet interface of the USRP. An additional RF frontend and antenna will provide enough output power and amplification to operate in an outdoor environment. A picture of the UE is given in Figure 14. Table 2 lists the set of hardware components as part of the UE platform.

Figure 14: 5G NR UE based on OpenAirInterface

Table 2

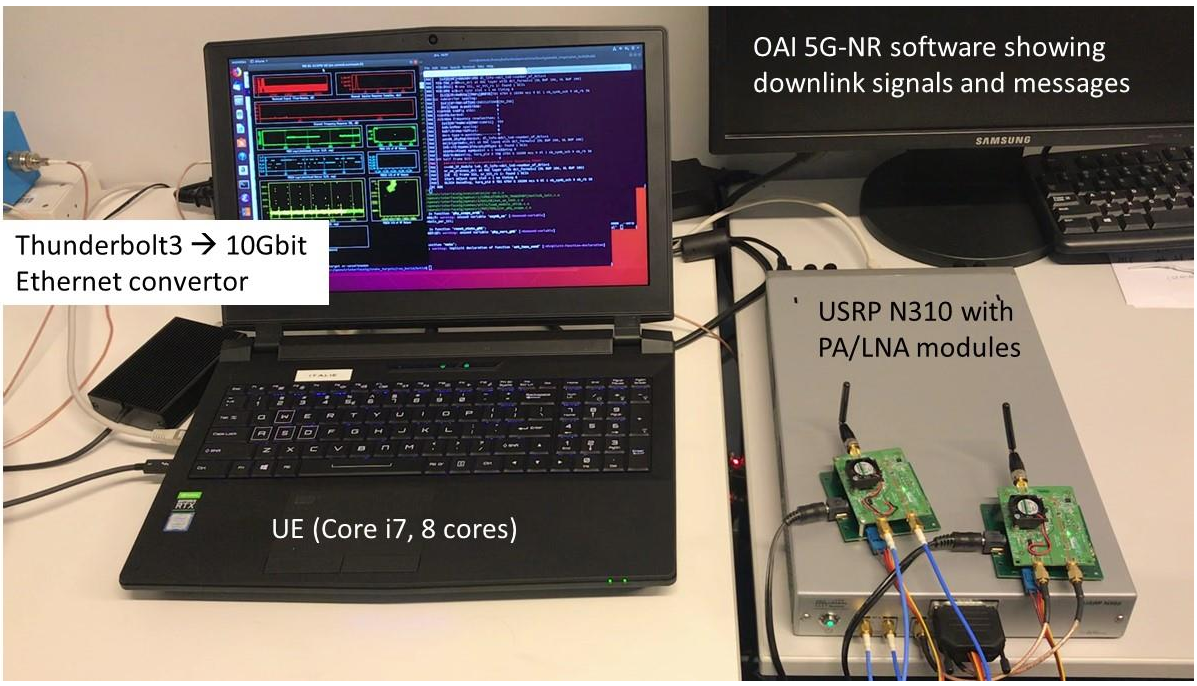

Figure 14: 5G NR UE based on OpenAirInterface

Table 2: Part list of 5G-NR UE platform

USRP N300	National Instruments
Laptop with Intel Core i7-9700K or Core i9-9900K (8 cores) and Thunderbolt 3	Schenker
Tunderbolt3 (2x) 10Gbit Ethernet convertor	Sonnettech
3.5 GHz RF frontend (PA/LNA/Switch)	Eurecom
3.5 GHz Antenna	Digi Key

The USRP N300 supports two RF channels (TX & RX), bandwidths of up to 100 MHz and carrier frequencies up to 6 GHz. The additional RF frontends support an output power of up to 20 dBm, but are limited to the 3.5 GHz band. The USRP converts to samples to and from baseband and transports them over the 10Gbit Ethernet interface to the host PC, where all the signal processing (including the PHY layer) is happening.

4.2.3. Software Architecture

OpenAirInterface is a multi-threaded software that runs on a real-time linux x86 host.

In our current implementation, one thread is dedicated to the reading and writing samples to and from the SDR, and one or more worker threads are responsible of processing the downlink signal of slot N and prepare the uplink signal of slot N+4, where N=t mod T, t is the current thread and T is the total number of threads. The number of threads is configurable to adapt the different requirement in 5G standard and different hardware execution time. An example for T=2 threads is shown in Figure 15. The processing time allowed for each slot is doubled from 1 slot to 2 slots.

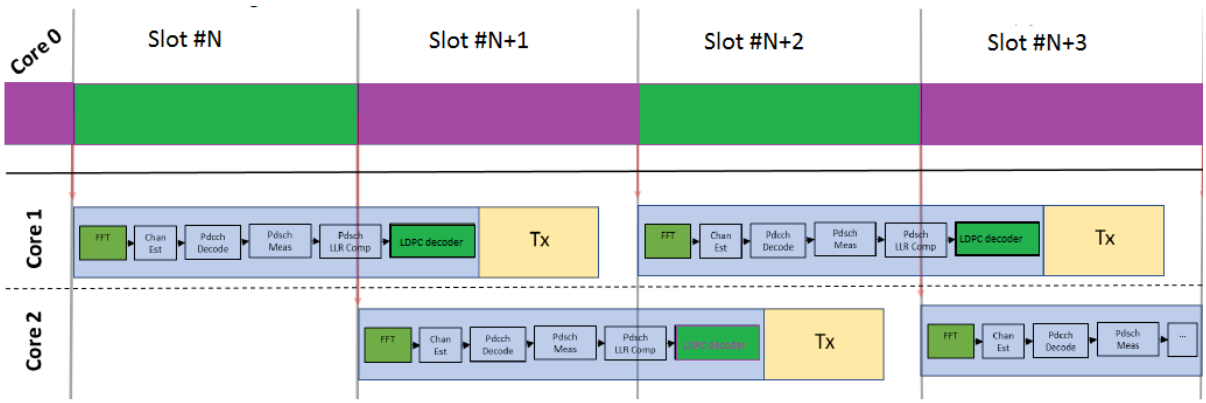

Figure 15: UE threading structure

When a thread is woken up, slot indication message is sent to the MAC, which replies with configuration messages for all the DL channels in the current slot N and all the UL channels for slot N+4. After PHY RX processing is complete, data is sent back to the MAC, which processes all the PDUs and interfaces with the higher layers.

4.3. Innovation

4.3.1. Supported PHY features

For the moment, we have focused mainly on the development of the downlink and for frequency range 1 (below 6 GHz). The supported subcarrier spacing is 30 kHz and the supported bandwidths are 40, 80, and 100 MHz (106, 217, and 273 PRB). The following physical channels and procedures are supported:

- Highly efficient polar encoder and decoder.
- Highly efficient 3GPP compliant LDPC encoder and decoder (BG1 and BG2 supported).
- Initial synchronization based on NR-PSS and NR-SSS.
- NR-PBCH. Receiver validated for single beam and know SSB offset.
- NR-PDCCH.
    - Type0-PDCCH common search space set configured by pdcch-ConfigSIB1 in Master Information Block.
    - User-specific search space set configured by PDCCH-Config.
    - Supported DCI formats: 00 (UL), 10 (DL).
- NR-PDSCH.
    - Single symbol DMRS, dmrs-TypeA-Position Pos2, DMRS configuration type 1, PDSCH mapping type A, single layer.
- NR-PUSCH.
- NR-PUCCH format 1.
- NR-PRACH (format 0,1,2,3 A1-A3, B1-B3).

4.3.2. Supported MAC features

The MAC currently supports

- Reception of MIB and corresponding configuration procedures.
- Reception of DCI and corresponding configuration of the PDSCH receiver or PUSCH transmitter.
- Reception of PDSCH PDU, header parsing.
- Generation of PUSCH PDU and header.

4.3.3. Higher layer features

RLC and PDCP are currently still the ones from LTE but will be brought up-to-date.

In NSA mode, all the 5G RRC messages are embedded in 4G RRC messages and transported over the LTE link. At the moment, this message is provided to the UE through a file at the startup of the UE. All the fields are parsed, and the corresponding configurations are carried out. In the next phase, this will be provided by the 4G UE.

LTE RRC message	NR RRC message
nr-secondarycellgroupconfig	RRCReconfiguration
nr-RadioBearerConfig1-r15	RadioBearerConfig
nr-RadioBearerConfig2-r15	RadioBearerConfig

4.4. Interoperability testing

4.4.1. Interoperability testing with Rohde&Schwarz SMBV and VSA

A first set of interoperability tests was carried out using the OAI gNB and the Rohde&Schwarz FSW vector signal analyzer. This actually tests more the gNB than the UE, but we then later repeated the same test with the OAI UE instead of the FSW. If the OAI gNB is standard compliant and the OAI UE can decode the signals from the OAI gNB also means that the OAI UE is standard compliant.

4.4.1.1. OAI gNB vs R&S FSW

In this test we configured the gNB to transmit the following channels:

- 1 synchronization signal block (SSB) consisting of PSS, SSS, PBCH in slot 0.
- PDCCH:
  - Coreset duration: 2, Coreset freq allocation PRB0-96.
  - Search space: UE specific.
  - DCI format 1_0.
- PDSCH
  - Start_prb = 0, n_prb = 50, start_symbol = 2, nb_symbols = 8, mcs=9.

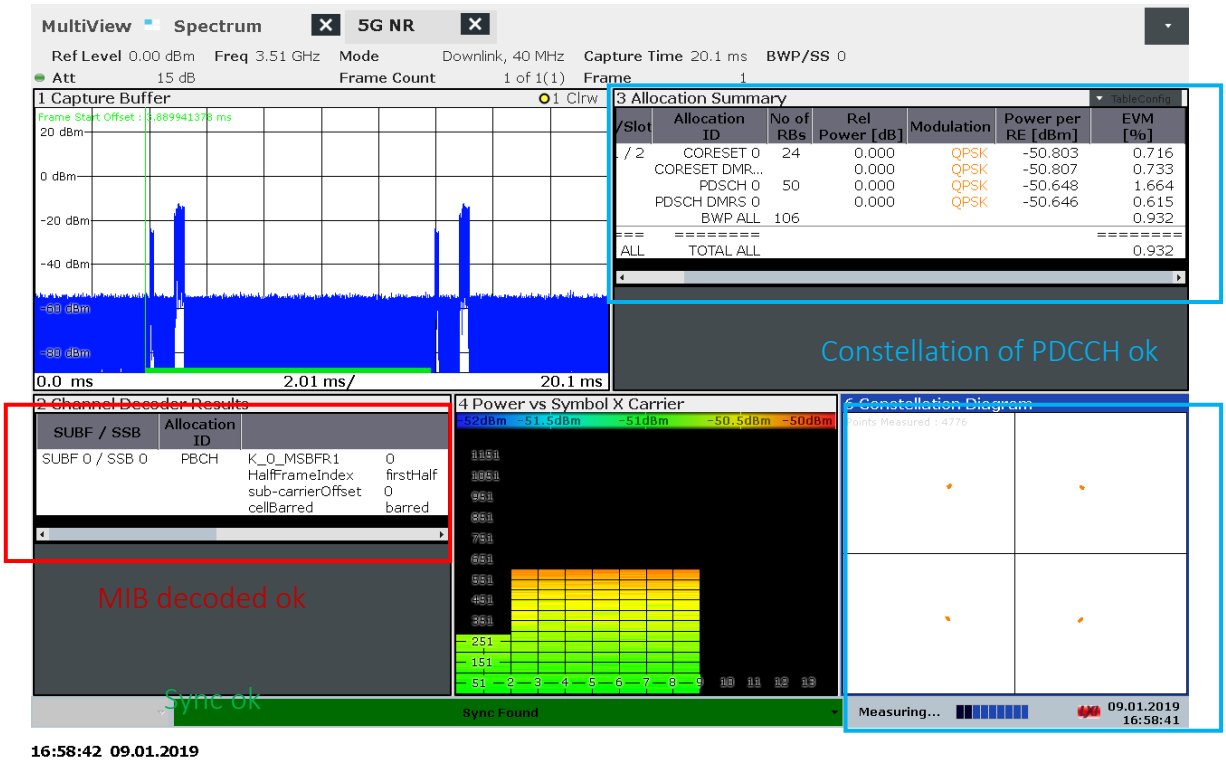

Figure 16: screenshot of the FSW showing that 1) synchronization is ok, 2) MIB is decoded correctly, 3) PDCCH constellation is ok

The screenshot of the FSW in Figure 16 shows that 1) synchronization is ok, 2) MIB is decoded correctly, 3) PDCCH constellation is ok. Unfortunately, at this stage we were not able to validate

the content of the DCI (CRC fails). The screenshot in Figure 17 shows that the PDSCH is correctly decoded.

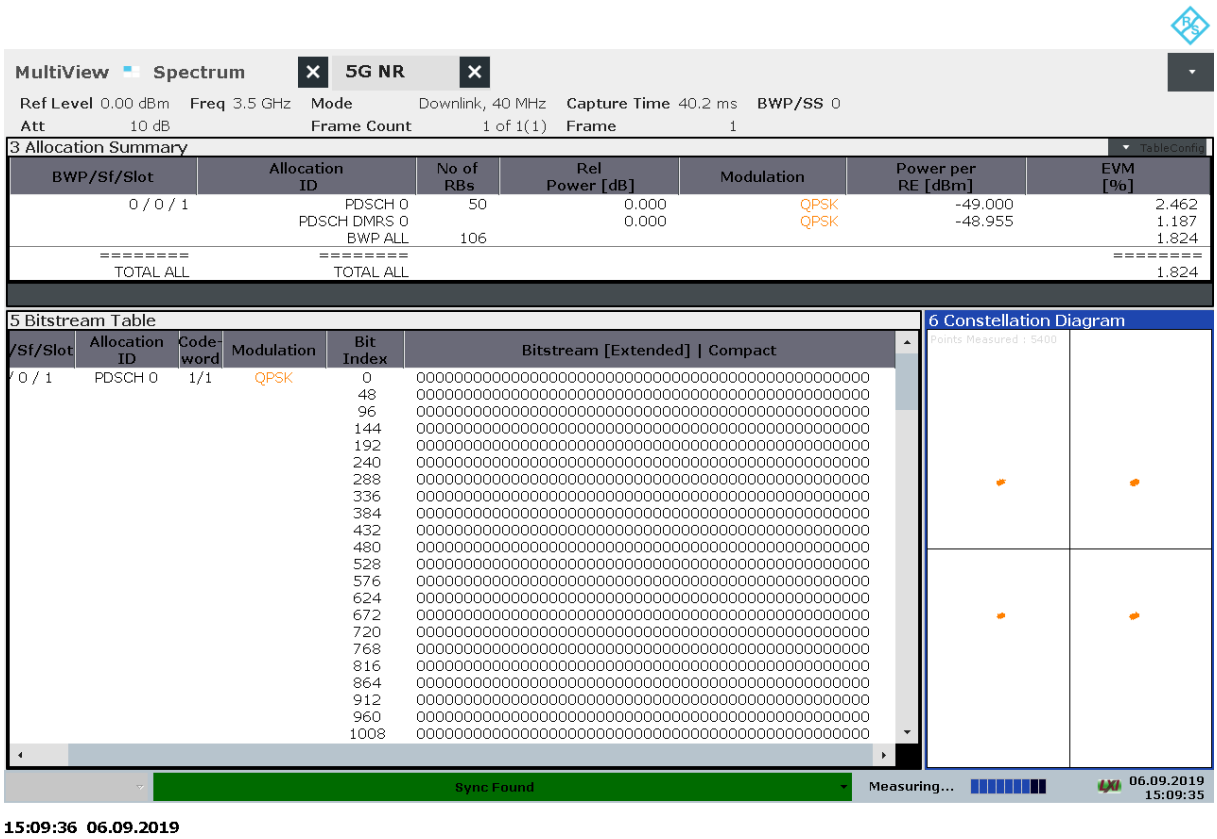

Figure 17: Screenshot of FSW showing PDSCH is decoded correctly

4.4.1.2. OAI gNB vs OAI UE

In the second test we replaced the FSW with the OAI UE. In Figure 18 we show a screenshot of the UE running in front of an OAI gNB. The gNB was configured the same way as in the previous section. It can be seen that the OAI UE synchronized, decodes the PBCH (and the MIB), the PDCCH (and the DCI) as well as the PDSCH.

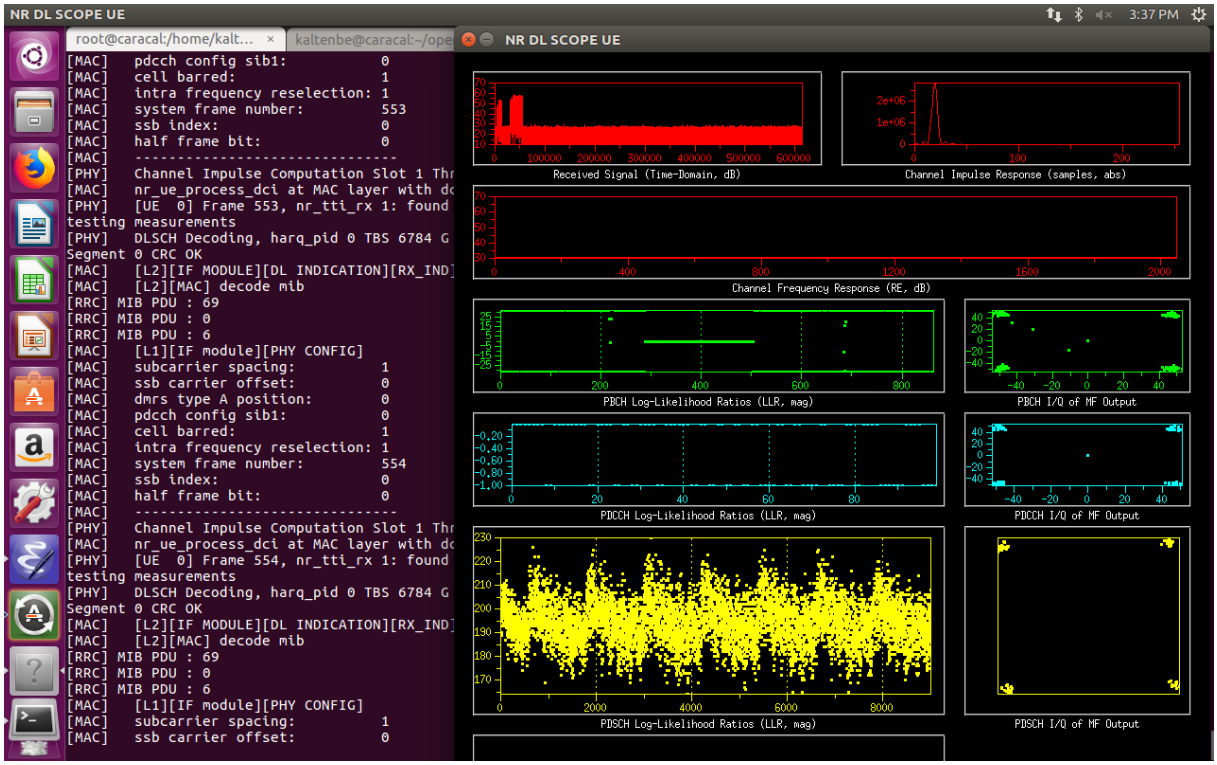

Figure 18: OAI UE screenshot showing detection of PBCH (MIB), PDCCH (DCI) and PDSCH

4.4.2. Interoperability testing with RunEL

In these tests we use test vectors provided by RunEL that were generated using their gNB software and feed them into OAI UE. This test is done in simulation only using the replay node program to replay the test vector and the RF simulator module at the UE that replaces the interface with the hardware target.

In the tests we can get an initial synchronization, and the PBCH is decoded correctly (CRC pass), but the contents of the MIB are not the expected ones. Neither PDCCH nor PDSCH is decoded at the moment.

5. Additional Access Components Description

5.1. Background

Since 5G NR access components used in 5GENESIS are in continuous development and their set of features and interfaces is limited in the early months of the project, as explained in the previous sections, alternate equipment is necessary to have a RAN to work, integrate, test and experiment in the different platforms. This alternate equipment will allow to test the integration of other components of the testbed, and will be used to perform baseline measurements of different KPIs.

Once the components described in the previous sections become functional enough to be used in the testbed, they will also be integrated accordingly and new measurements will be taken and compared with the baseline values.

This sections describes the additional access components being used in 5GENESIS for early integration and experimentation, as well as the future developments to make possible the aggregation of different Radio Access Technologies (RATs) to 5G to enhance the platforms RAN.

5.2. UXM LTE-A emulator

The E7515A UXM Wireless Test Set [8] is an equipment that allows functional and RF design validation for 4G and it is usually used for conformance testing of mobile devices. It acts as part of the RAN in the Malaga Platform.

Figure 19: E7515A UXM Wireless Test Set

It offers the user complete control of both the radio stack and the signaling, and its configurability makes possible to experiment with different UE resources assignation, bandwidths, bands, and even downlink channel emulation. Additionally, it supports carrier aggregation (CA), reaching data rates higher than 500 Mbps, and it also supports MIMO configurations.

This equipment does not radiate the radio signal over the air. Instead, the signal is conducted through properly calibrated RF cables to the UE antenna(s). The UXM is able to interconnect two UEs, and it is possible to connect more using RF switches.

The UXM in the Malaga Platform testbed has been enhanced to support the standard S1 interface, which makes possible to use commercial core networks in experiments. Along with the S1 interface addition, the unit has also been enhanced to support LWIP [9], LTE WLAN integration with IPsec tunnel. This technology allows offloading traffic to the Wi-Fi radio access, and even to aggregate traffic using both LTE and Wi-Fi radio, attending to different scheduling methods to steer traffic to one radio access or the other. LWIP provides the availability of multi-RAT for the testbed.

This equipment, present in the 5GENESIS Malaga Platform, is being very beneficial for experimentation. It allows testing and measuring different KPIs before having any 5G equipment in the platform, whether it is internally developed or commercial. It has been used to establish baseline results with LTE for some measurements, which will be taken as baseline results for a useful comparison once those measurements can be taken using 5G equipment. It also helps to validate different components of 5GENESIS, being part of experiments that involve Experiment Life Cycle Manager (ELCM), for example.

5.3. LWIP enhancements for UXM emulator

LWIP is a feature with a great potential for further development and evolution. The implementation of different scheduling methods to optimize traffic aggregation is an interesting aspect, and so is the possibility of adding support for new RATs. The development of scheduling strategies is a work in progress in the Malaga Platform.

New planned scheduling methods include particular protocol prioritization, scheduling's covering specific Use Case necessities, and more advanced strategies such as measuring network parameters in real-time and dynamically adapting the scheduling.

Additionally, adding 5G NR support is planned as a future enhancement to be developed in the context of 5GENESIS. Currently there is no information in the 5G standardization documents that mention RAT interworking, but it is expected to be developed. Nevertheless, 5G NR support in LWIP can be implemented following the same approach, and future adaptations to the standard can be made when the proper documentation is available.

Following the 5G roadmap itself, this new development will be focused on NSA mode first, and later we will work with an implementation for the SA mode, with the support of new standard documentation.

6. Terrestrial Backhaul System Description

6.1. Background

Millimeter wave (mmWave) communication is a solution to provide multi Gbps data rates thanks to the abundant frequency spectrum resources in mmWave spectrum bands. For example, in the 60 GHz band, the exploitation of large unlicensed bandwidth (up to 7 GHz) is possible. These characteristics pose design decisions that range from the nature of the platform being developed, whether it is an application specific integrated circuit (ASIC) – involving long development cycles and not suitable for fast and flexible development; and the use of Software Defined Radio (SDR) platforms, usually based on FPGAs. The latter are usually bulky and require the integration of ultra-high data rate converters.

A fundamental characteristic of mmWave spectrum is the high propagation loss, e.g. there is around 20 dB additional free space propagation loss in the 60 GHz band as compared to that at the 5 GHz band. To provide sufficient link budget, mmWave systems rely on directional beamforming with large antenna arrays at both transmitter and receiver. A typical mmWave device has an antenna with high number of antenna elements and uses RF beamforming to form narrow beams in certain directions in space.

Such mmWave platforms can be easily mounted on lampposts or building walls, therefore allowing to create a meshed-infrastructure for 5G wireless networks.

The 60 GHz system developed by IHP, being an FPGA-based SDR platform, consists of two parts, one part being the baseband platform, and the other an RF analog front-end (AFE).

6.2. Architecture, Implementation, Integration and Testing

In general, it is not possible to process the sampled IQ data stream in real-time with software running on a general-purpose CPU. Therefore, an SDR approach requires reconfigurable FPGA systems, using accelerators implemented in the programmable logic or fully hardware implemented baseband processing chains. In these systems, the digital signal processing in the baseband domain requires a huge amount of computational resources.

6.2.1. Baseband platform

The baseband platform is a custom System-on-chip (SoC) software-defined radio (SDR) platform. A photo of the top side of the developed printed-circuit board (PCB) is shown in Figure 20. The PCB has a size of 155 × 100 mm. The platform consists of a SoC with a huge number of programmable logic resources as well as a high-performance dual-core ARM-based software processing system.

The need of Gigasamples per second (GSps) data converters, which are not included in the SoC itself, are integrated on the PCB. Two ADC and two DAC channels with sampling rates up to 2.5 GSps are integrated on the same board, together with four Gigabit Ethernet interfaces and additional general-purpose input/output (GPIO) connectors. The SoC is of a Zynq 7000-series (for instance, Zynq 7045 or 7100). All GPIO extension connectors and the analog interface are

accessible on the top side, whereas mostly all active components like analog-to-digital converters (ADCs), digital-to-analog converters (DACs), SoC, and Ethernet PHYs are mounted on the bottom side to ensure proper cooling with a heatsink.

More information on the baseband platform can be found in Petri & Ehrig [10].

Figure 20: IHP's SDR platform PCB.

6.2.2. RF Analog Front-End (AFE)

The used RF analog front-end (AFE) is based on a 16-TX/16-RX 57-71-GHz RF transceiver from Sivers IMA. The transceiver comprises 16 TX + 16 RX channels in an RF-beamforming configuration with separate TX and TX antennas. The chip is mounted on a PCB (top and bottom view is shown in Figure 21). Tx and Rx antennas are an array of 16 dual circular patch antenna elements. The chip has been designed for high transmit power and low phase noise in order to support 40 dBm EIRP and up to 64 QAM with 45 MHz reference signal. More information on the beamforming circuit can be found in [11].

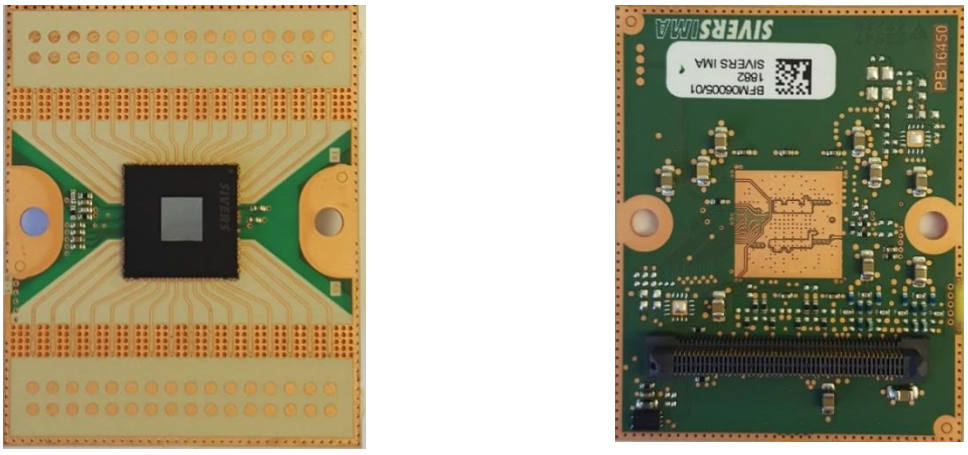

Figure 21: Top and bottom view of Sivers IMA RF AFE

To accommodate the RF AFE with the baseband platform an adapter-board has been designed. The adapter board acts as a “bridge” between the baseband board and the RF module. At the bottom are the connectors to take the baseband signal, reference and control signals, which are routed further to a connector on top, to which the RF module will be attached. Furthermore, there are additional GPIO pins for debugging purposes, and an SFP+ cage for 10 Gbps Ethernet connection. A photo of the top side of the adapter-board is shown in Figure 22

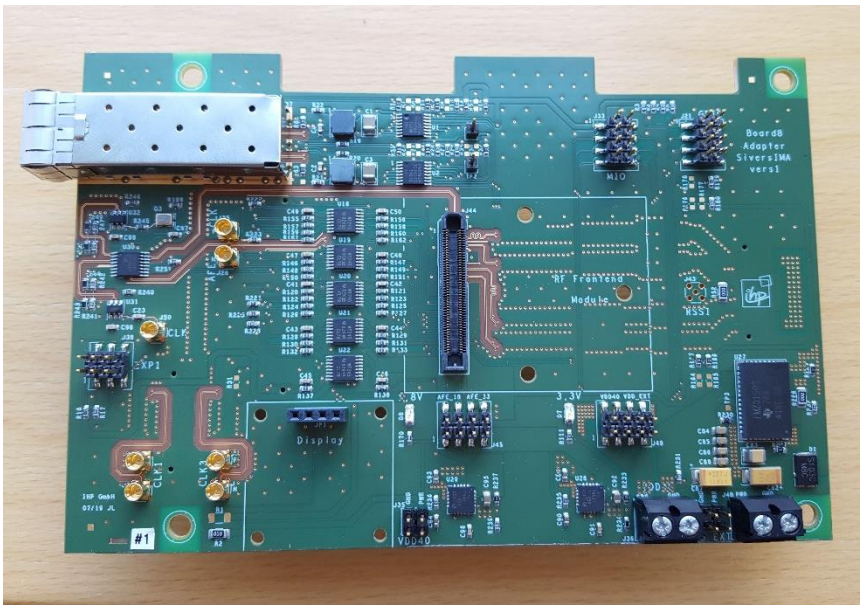

Figure 22: Top view of the adapter-board.

A photo of the complete 60 GHz platform, including the baseband platform, adapter-board and RF AFE, is shown in Figure 23.

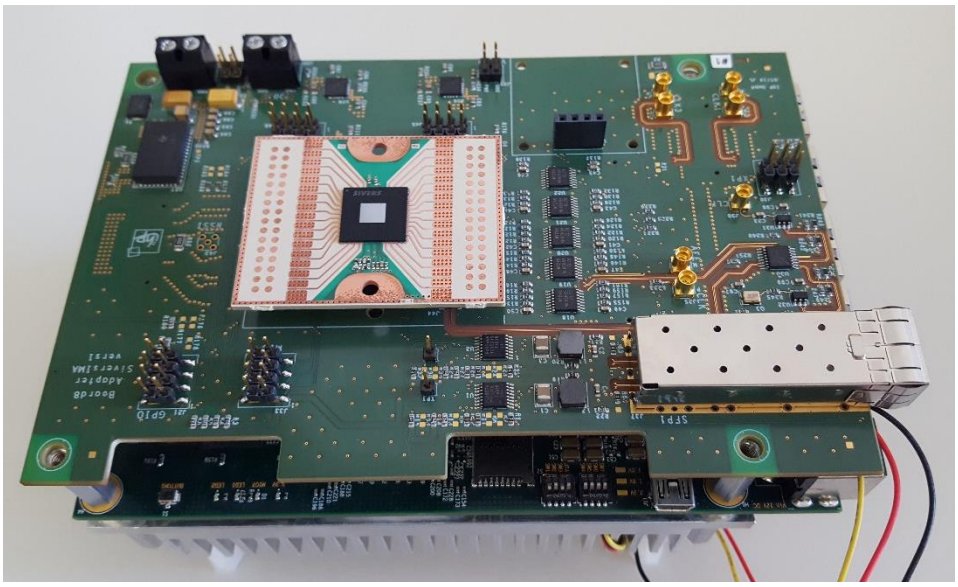

Figure 23: 60 GHz beamforming device.

For outdoor deployment, the platform shown in Figure 23 shall be mounted on an active cooling device (see Figure 24) and covered by plastic enclosure.

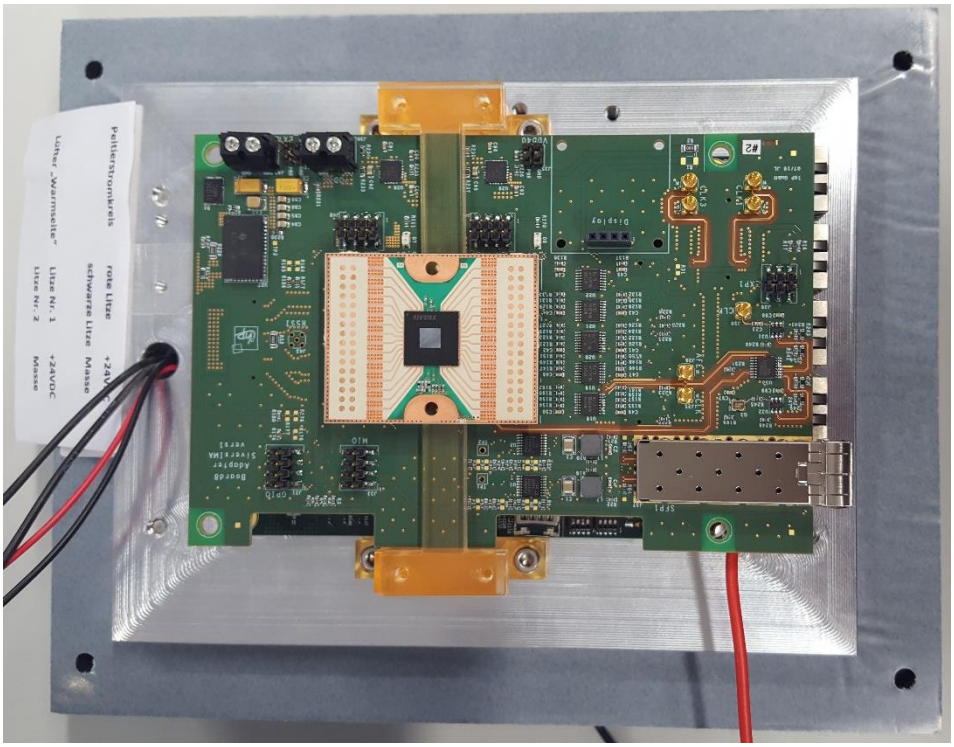

Figure 24: 60 GHz device with BF module mounted on an active cooling device (Peltier).

6.3. Innovation

The mmWave platform provided by IHP addresses the challenges of software defined processing and rapid prototyping in the micro- and mmWave frequency region. There is to date no solution packing all necessary external components of the SoC like ultra-high data rate ADC and DAC converters on a small-scale PCB. Instead, one needs to use FGPA evaluation boards with a large number of connectors and add-on modules, e.g. for the data converters. The platform it is focused here on micro- and mmWave wireless systems. However, it can also be used for wired communication systems, with either electrical or optical signal transmission.

In terms of applications, the timestamping trigger feature allows the synchronization of two stations. This can be used to estimate the processing times of know ranging estimation procedures, which could lead to the use of this system as a precise 60 GHz ranging system. The availability of an FPGA allows the implementation of multi-gigabit real-time communication systems.

7. RELEASE A SUMMARY AND FUTURE PLANS

This deliverable summarised the mid-term progress in the area of 5G Access Components (5G gNB), User Equipment, and wireless terrestrial backhaul. In this first phase, the focus has been on the development of the lower layers individually by the involved partners. In the second phase of the project, the focus will be on interoperability, especially between the gNB and the UE. More precisely, we will focus on the following main tasks:

- Completion of the testing of the uplink, both in the gNB (Runel) and the UE (Eurecom)
- Interoperability testing of the 5G Base Station with Eurecom UE
- Integration of the Base Station PHY layer from Runel with a third-party Protocol Stack (layer2 and layer 3)
- Completion of the OpenAirInterface NR-UE protocol stack (layer 2, layer 3, NAS) for both standalone and non-standalone operation (Eurecom)
- Integration of the Base Station with Athonet NgCore (Runel)
- Delivery and Integration of the 5G gNB and UE to the Malaga and Athens Test Beds (Runel & Eurecom)

IHP will pursue the rapid prototyping of complete mmWave systems, by adding novel features to the existing platform. The availability of a firmware / operating system on the SoC together with a PC software framework with example applications will be leveraged to easily upgrade its use and to incorporate some of the abovementioned innovations.

8. CONCLUSIONS

The main conclusion of this midterm report on the 5G access components and user equipment that are being developed and deployed in the different 5GENESIS Platforms is that the equipment under development will be able to support the different experiments , use cases and test that the platforms are planning to perform.

9. BIBLIOGRAPHY

[1] 5GENESIS Consortium, "D2.1 Requirements of the Facility," 2018. [Online]. Available: https://5genesis.eu/wp-content/uploads/2018/11/5GENESIS_D2.1_v1.0.pdf.

[2] 5GENESIS Consortium, "D2.2 Initial overall facility design and specifications," 2018. [Online]. Available: https://5genesis.eu/wp-content/uploads/2018/12/5GENESIS_D2.2_v1.0.pdf.

[3] 5GENESIS Consortium, "D2.3 Initial planning of tests and experimentation," [Online]. Available: https://5genesis.eu/wp-content/uploads/2018/12/5GENESIS_D2.2_v1.0.pdf.

[4] 3GPP, "Release 15 Description; Summary of Rel-15 Work Items," 3GPP TR 21.915 V2.0.0 (2019-09)

[5] R. Knopp and K.-H. Hsu, "5G new radio user equipment FAPI-like interface," Eurecom, Tech. Rep., 2018. https://gitlab.eurecom.fr/oai/openairinterface5g/wikis/5g-nr-development-and-releases

[6] Small Cell Forum, "5G FAPI: PHY API Specification," Tech Rep 222.10.01, June 2019. https://www.smallcellforum.org/5g-phy-api-release/

[7] Florian Kaltenberger, Guy de Souza, Raymond Knopp, Hongzhi Wang, "The Open Air Interface 5G New Radio Implementation: Current Status and Roadmap", http://www.eurecom.fr/publication/5822

[8] E7515 UXM Wireless Test Set, Keysight Technologies https://www.keysight.com/en/pd-2372474-pn-E7515A/uxm-wireless-test-set?cc=US&lc=eng

[9] Richard Burbidge, 3GPP RAN2 WG chair, "LTE-WLAN Aggregation (LWA) and LTE WLAN Radio Level Integration with IPsec Tunnel (LWIP)", March 2016 https://www.3gpp.org/images/PDF/2016_03_LWA_LWIP_3GPPpresentation.pdf

[10] M. Petri and M. Ehrig, "A SoC-based SDR Platform for Ultra-High Data Rate Broadband Communication, Radar and Localization Systems," 2019 Wireless Days (WD), Manchester, United Kingdom, 2019, pp. 1-4. doi: 10.1109/WD.2019.87342406.

[11] E. Oejefors et al "A 57-71 GHz Beamforming SiGe Transceiver for 802.11ad-Based Fixed Wireless Access" in Proc. of IEEE Radio Frequency Integrated Circuits Symposium (RFIC 2018), Philadelphia, USA, 2018

[12] 5G PPP Architecture Working Group; "View on 5G Architecture" Versions 3.0 ; June 2019

[13] 3GPP; TS 38.214; V15.6.0 (2019-06); Technical Specification Group Radio Access Network; "Physical Layer Procedures for data (Release 15)"